The Inner and Outer Automorphisms of Pitch-Class Inversion and Transposition: Some Implications for Analysis with Klumpenhouwer Networks

Henry Klumpenhouwer

All Klumpenhouwer network analysis is carried out using the outer automorphisms defined by Lewin to relate the pitch-class transformations that label corresponding arrows on isographic networks.[1] It is possible, however, to make use of inner instead of outer automorphisms to describe such relations. Since there are benefits as well as drawbacks to such an approach, it is worth exploring inner automorphisms and their interaction with Klumpenhouwer networks more concretely, comparing and contrasting their features to those of outer automorphisms.

In general, inner automorphisms will be shown to hold more promise than outer automorphisms for those interested in approaches that have some phenomenological merit. This holds true in the sense that category is used by current music theory writings, namely, as an exclusive interest in music-analytical objects that correspond to a certain minimum degree with perceptual experience broadly construed. Some, though not all, outer automorphisms will be discussed as deeply flawed when measured against precisely such considerations; they represent, however, certain "structural" gains in comparison to inner automorphisms, considerations that have ultimately won out in the course of the development of Klumpenhouwer network methodology. In general, these considerations come into play at the point one considers how the operations that define networks (usually conceived as "harmonies") and the operations that define sequences of networks (usually conceived as "progressions") mirror each other, either structurally or phenomenologically. Accordingly, the present study rehearses the merits and liabilities of both groups of automorphisms on the T_n/I_n operations and

[1]David Lewin, "Klumpenhouwer Networks and Some Isographies that Involve Them," *Music Theory Spectrum* 12/1 (1990): 83–120.

assesses the consequences for Klumpenhouwer network analysis, concluding with a few remarks on implications for current styles of music theory.

Inner Automorphisms

Morris briefly discusses inner automorphisms of the T_n/I_n group of operations as part of a larger investigation into his TTOs, which include the M-transformation in addition to pitch-class transposition and inversion.[2] Group theory has long defined the general structure and properties of inner automorphisms. Accordingly, there is little technical novelty in what I present here other than to illustrate the properties of the inner automorphisms of the T_n/I_n group as they relate to the specific context of Klumpenhouwer networks.

Automorphisms in general map a group onto itself so as to preserve group composition, which is to say that automorphisms X must satisfy the equality $x(a) * x(b) = x(a * b)$, where a and b are elements and * represents the combination protocol of the group in question. Inner automorphisms in particular have the transformational structure $X(a) = -x * a * x$, where x and a are elements and * represents the group's combination protocol. The following sequence of equalities demonstrates how such transformations of a group onto itself fulfills the required automorphic properties:

$X(a * b)$	$= -x * (a * b) * x$	
	$= -x * (a * i * b) * x$	(i represents the identity element)
	$= -x * (a * (x * -x) * b) * x$	(decomposing i into x and its inverse)

[2]Robert Morris, *Composition with Pitch-Classes* (New Haven: Yale University Press, 1987), pp. 167–170.

	$= (-x * a * x) * (-x * b * x)$	(associative property of groups)
	$= X(a) * X(b)$	(as required)

Applying the abstraction to the context of the T_n/I_n group of pitch-class operations yields the following rules.

Rule 1:

$[T_x]T_m$	$= T_{-x} * T_m * T_x$	
	$= T_m * T_{-x} * T_x$	(commutative property among T)
	$= T_m * T_0$	(inverse axiom of group structure)
	$= T_m$	
$[T_x]I_m$	$= T_{-x} * I_m * T_x$	
	$= I_{(m+x)} * T_x$	(group combination protocol)[3]
	$= I_{(2x + m)}$	(group combination protocol)

Rule 2:

$[I_x]T_m$	$= I_x * T_m * I_x$	(I_x is reflexive)
	$= I_{(x+m)} * I_x$	(group combination protocol)
	$= T_{(x - (x+m))}$	(group combination protocol)
	$= T_{-m}$	
$[I_x]I_m$	$= I_x * I_m * I_x$	
	$= T_{(m-x)} * I_x$	(group combination protocol)
	$= I_{(x - (m-x))}$	(group combination protocol)
	$= I_{(2x - m)}$	

[3]The combination protocol for the T_n/I_n group is as follows (using right orthography):

$T_m * T_n = T_{(m+n)}$
$T_m * I_n = I_{(n-m)}$
$I_m * T_n = I_{(m+n)}$
$I_m * I_n = T(_{n-m})$

As ever, addition and subtraction are carried out mod 12.

In short, then,

Rule 1: $[T_x]T_m = T_m$; $[T_x]I_m = I_{(2x + m)}$

Rule 2: $[I_x]T_m = T_{-m}$; $[I_x]I_m = I_{(2x - m)}$

In addition to understanding the algebraic sources of inner automorphisms, it is possible to grasp how such algebraic structuring reflects structuring in musical contexts.

Example 1 presents visually the conceptualization underlying inner automorphisms. The diagram shows two graphs, labeled α and β for reference. Each graph involves two nodes (of unspecified content) and an arrow labeled with a (pitch-class) inversion operation; I_m in α and I_n in β. The four nodes in the diagram are numbered for reference. The diagram asserts that I_m maps under the inner automorphism $[T_x]$ to I_n. (The square brackets distinguish the inner automorphism $[T_x]$ from the outer automorphism $<T_x>$ and the pitch-class operation T_x.) The diagram also asserts that each node in α maps to the corresponding node in β under the pitch-class operation T_x.

Example 1. Inner Automorphism Conceptualization.

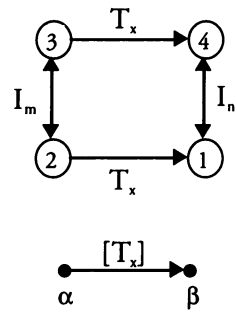

We can derive the general structure of inner automorphisms by making a simple modification to the diagram. Example 2 carries out such a change. The arrow extending from node 2 to node 4 in Example 1 is reversed in Example 2: consequently, T_x is replaced by its inverse T_{-x}.

Example 2. General structure of inner automorphism.

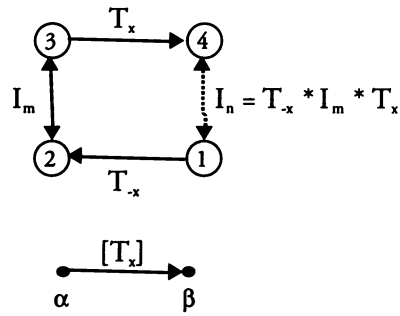

The adjustment in the arrow direction allows us to produce an equality that determines I_n in β. The diagram provides two different yet equivalent routes to travel from node 4 to node 3: either directly (represented by I_n), or via nodes 2 and 1 (represented by the sequence T_{-x}, I_m, T_x). Accordingly, we can derive from the diagram an equality with the characteristic structure of inner automorphisms:

$$I_n = T_{-x} * I_m * T_x$$

which reduces to the second protocol of Rule 1 above, *viz*,

$$I_n = I_{(2x + m)}$$

Diagrams similar to those in Examples 1 and 2 can be constructed for the remaining three cases covered by the rules of inner automorphisms provided earlier. Accordingly, inner automorphisms can be meaningfully traced back to relatively concrete musical experiences based on the conceptualizations represented in the Example 1. The point is fairly important for those who wish to be able to relate analytical observations to simple musical contexts. Accordingly, it is entirely appropriate to speak of (the graph of) β as a transposition or modulation under T_x of (the graph of) α.

Node content must be considered to be empty. In the example, only when α and β in the example are pitch-class collections that relate under the pitch-class operation (or in more general contexts, some pitch-class operation)—which is to say, if α and β belong to the same set-type—can one extend coherent relationships between the nodes of α and corresponding nodes of β. In such cases one may speak of what Lewin calls a network homomorphism between α and β, since it is possible to extend relations between the corresponding graphs, arrow labels, *and* node content.[4] When α and β in the example belong to different set classes, pitch-class operation T_x—when derived from the appropriate inner automorphism $[T_x]$—will map the node contents of α onto a pitch-class collection that can be interpreted as strongly isographic (with respect to outer automorphisms) to β. The same holds (with appropriate changes) in the case of $[I_x]$.

At base, acceptance of all of this relies very heavily on one's acceptance of the general suitability of working with transformational graphs, namely, working with pitch-class transformations without specific regard to pitch classes. Skepticism about the relevance of such transformational approaches is often grounded on species of skepticism that can always be worked back to increasingly fundamental methodological categories such as "pitch class," which itself corresponds only through several layers of mediation to perceptual experiences, and even to the notion of pitch.

Ultimately, though, one can fruitfully employ inner automorphisms in the context of Klumpenhouwer network analysis, relying on structuring of the sort depicted in Example 1 to engage conceptually with music at hand in a fairly concrete way. Since that structure is so similar to transformational relations traditionally extended between pitch-class collections belonging to the same Forte set type, one can conveniently invoke such relations translated into the terms of network homomorphism,

[4]David Lewin, *Generalized Musical Intervals and Transformations* (New Haven: Yale University Press, 1987), pp. 203*ff*; and "Notes on Network Homomorphism," typescript, n.d.

adding and withdrawing considerations of pitch-class content as they become both possible and meaningful.

I have withheld until now a discussion of the limitations of inner automorphisms in the interests of strengthening their position in the face of the established practice of using outer automorphisms to extend isographic relations between Klumpenhouwer networks. The difficulty with inner automorphisms arises under each of the protocols that act on pitch-class inversion, the protocols of the form $[I_x]I_m = I_{(2x - m)}$ or $[T_x]I_m = I_{(2x + m)}$. For these protocols there will always be two values, a tritone apart, for x, since under mod 12 arithmetic 2x = 2(x + 6). Accordingly, while one can define 24 inner automorphisms by ranging all twelve values through x in the formations $[I_x]$ and $[T_x]$, one can define only 12 functionally-distinctive inner automorphisms. As a result, when working with inner automorphisms, one must either bear in mind the possibility of (at least) two operations for each isographic pair, or carry out analytical work with inner automorphisms under mod 6 arithmetic. Furthermore, inner automorphisms can only relate precisely half the networks relatable under outer automorphisms. In particular, the indices of corresponding inversion operations on two graphs must differ by (in the case of $[T_n]$-isographies) or sum to (in the case of $[I_n]$-isographies) an even number. In the instance of $[I_n]$-isographies, it may be possible to strategically reset 0 to C♯ instead of C in order to render certain pairs of graphs relatable under inner automorphisms; of course, such reassignments may or may not have certain negative effects on other pairs of graphs in the analysis.

Properly speaking then, the inner automorphisms form a subgroup of outer automorphisms. Comparing the constituent rules and protocols displayed in Table 1 below, we see that all inner automorphisms are functionally equivalent (have the same effect, the same mapping cycles), in particular, when x in $<I_x>$ and $<T_x>$ is equal to 2_y in $[I_y]$ or $[T_y]$ respectively. (The inner and outer protocols with T_m as arguments are more obviously identical.)

Table 1. Inner versus outer automorphisms.

Outer Automorphisms	Inner Automorphisms
Rule 1: $<T_x>T_m = T_m$	Rule 1: $[T_y]T_m = T_m$
$<T_x>I_m = I_{(x+m)}$	$[T_y]I_m = I_{(2y+m)}$
Rule 2: $<I_x>T_m = T_{-m}$	Rule 2: $[I_y]T_m = T_{-m}$
$<I_x>I_m = I_{(x-m)}$	$[I_y]I_m = I_{(2y-m)}$

Even if this presents no conceptual difficulties, it does restrict the isographies one can extend between networks that exhibit the usual features of relatable graphs—identical or inverted transposition labels on corresponding arrows, and so on. This represents a procedural difficulty in some contexts, which in turn limits its structural efficacy, especially in comparison with outer automorphisms.

Outer Automorphisms

The ability to conceive of specific inner automorphisms in categories relevant to simple—or familiar—music contexts, and thus to experiential or "phenomenological" categories (however tenuous the connection), gives inner automorphisms an advantage over some outer automorphisms, in particular those that produce "negative" isographies in Lewin's terminology. These automorphisms all have the form $<I_x>$. On other occasions, I have discussed the ease with which $<T_x>$ automorphisms can be conceived to derive from relatively conventional voice-leading paradigms and how they interact with fairly concrete and common musical situations.[5] Strong isography, which is to say isography carried out under $<T_0>$, is a particularly coherent relationship in this respect, since the node contents of networks standing in this relationship project symmetrical voice leading in parallel and similar motion. These features are relatively comprehensible and can easily be modified to produce the remaining "positive" isographies. It is worth emphasizing,

[5]Henry Klumpenhouwer, "An Instance of Parapraxis in the Gavotte of Schoenberg's Opus 25," *Journal of Music Theory* 38/2 (1994), pp. 223*ff.*

however, that such voice-leading features are purely epiphenomenal to isography in general, which is a relationship between graphs, that is to say, networks without regard to node contents. Nevertheless, for some, smuggling considerations of node content into discussions of graph relationships may be exercising both methodological and conceptual poor judgment, since thinking about node content obscures the positive claims of graph analysis in general and Klumpenhouwer networks in particular. For others, such considerations provide a useful bootstrapping from the dominant emphasis on pitch-class content in traditional set-theoretic styles of atonal music analysis to the emphasis on pitch-class (and other) *transformations* in Lewin-style graph and network methodologies, of which Klumpenhouwer networks are a species.

Such useful and helpful practices are not possible, however, under $<I_x>$ automorphisms, since they cannot be generated by modifying the model produced for $<T_0>$. Hence, as far as I can tell, they cannot be shown to generate predictable relationships between the pitch-class contents of corresponding nodes in $<I_x>$-related networks. Rather, $<I_x>$ automorphisms can only be conceived as operations on pitch-class operations or network arrow labels. Accordingly, they pose problems for those opposed to such high levels of abstraction in music theoretic work on the grounds that they fail to take into account important phenomenological considerations.

Example 3 depicts the conceptualization underlying outer automorphisms of the form $<I_x>$. The diagram presents two clocks of the sort often used to model pitch-class space. But where such diagrams depict *pitch classes* (as hour indications on a clock-face), the diagrams in Example 3 depict *pitch-class operations*: the upper clock displays T_x operations; the lower clock, I_x operations. The particular operation represented in the example is $<I_2>$.

Example 3. Outer Automorphism Conceptualization.

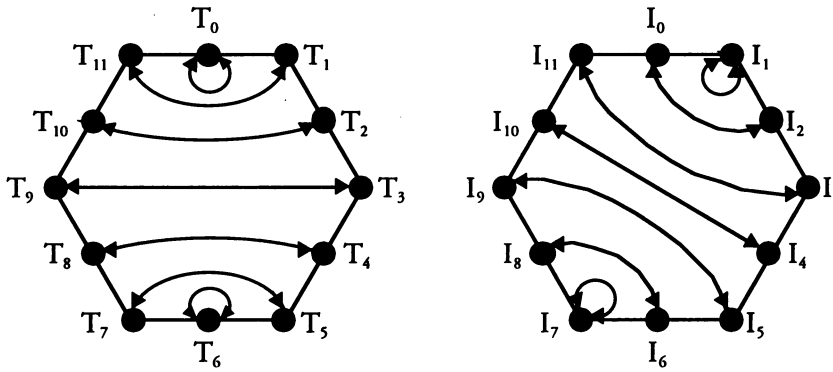

$\langle I_2 \rangle T_x = -(T_x)$ $\langle I_2 \rangle I_x = I_{(2-x)}$

Under this operation, $\langle I_2 \rangle T_m = T_{-m}$; and $\langle I_2 \rangle I_m = I_{(2-m)}$.[6]

In other words, pitch-class transpositions map to their inverses, and inversion operations whose indices sum to 2 (mod 12) exchange. The effect on transpositions is thus "inversional" in the sense often used by traditional theories of both tonal and atonal music. The effect of $\langle I_x \rangle$ on inversion operations appears to be easily linked to the categories of atonal pitch-class inversion. This has both a true and a false sense. It is true in just the sense projected by the *structural* similarity between pitch-class inversions and $\langle I_x \rangle$ automorphisms, a structural similarity suggested by the right-hand clock in Example 3. It is false, however, in the sense strongly suggested by the notational similarity between I_x and $\langle I_x \rangle$. In I_x, x signifies the sum of two pitch classes (which may be identical) that function collectively as

[6]The relevant actions of outer automorphisms are captured in the following two rules:

Rule 1: $\langle T_x \rangle T_m = T_m$
$\langle T_x \rangle I_m = I_{(x+m)}$

Rule 2: $\langle I_x \rangle T_m = T_{-m}$
$\langle I_x \rangle I_m = I_{(x-m)}$

Rule 1 relates to Lewin's "positive" isography; rule 2, to "negative." Lewin, "Some Isographies," pp. 88–89.

axes of symmetry for the relevant operation; it is precisely this structural aspect of pitch-class inversion that Lewin wishes to foreground in his notational protocol I u/v.[7] The effect is more serious in the automorphisms $<I_x>$ since here x signifies the sum of two axes of symmetry which in turn represent the sum of two pitch classes.

To capture this aspect of the structure of automorphisms, one could employ formulations such as <I u/v//w/x> in place of $<I_x>$. In a sense, such a practice ought to be promoted simply in order to foreground the theoretics that underlie negative isographies. There are two benefits to doing so: first, the effort required to manipulate such relationships in a musical analytical setting would correspond appropriately to the level of complexity involved in rendering these relationships materially meaningful; second, it would complicate (appropriately) efforts to extend relationships between I_x and $<I_x>$ transformations, in turn encumbering (appropriately) efforts to establish a species of *Schichtenlehre* for Klumpenhouwer networks, since in analytical contexts, they arise on even the first plane of presentation, between negatively isographic networks.

In rebuttal one could assert, drawing on the experience of Schenkerian theory, that one ought to be able to complicate simple, musically comprehensible theoretic structures recursively into levels of similar organization without fretting over demands that the resulting analytical features be materially meaningful at each stage, and that it is only proper that requirements of this sort be weakened with each successive recursion. Yet even those who accept this line of argument might well object to the rapidity and resoluteness with which $<I_x>$ operations abstract from musical material.

Conclusions

I have presented a qualified case in favor of using inner automorphisms as an alternative to outer automorphisms. The case for inner automorphisms is (relatively speaking) more

[7]Lewin, *Generalized Intervals and Transformations*, pp. 50*ff.*

"phenomenologically" regulated than is the case for outer automorphisms, in the sense that it conforms more closely to a requirement that methodological structures and procedures ought to be meaningful in some (extended) sense to musical experience (broadly construed) and that one ought to be cautious about methodological structures and procedures that are "formalist" in the negative sense of generating meaning-effects solely with reference to their own private methodological categories.

Outer automorphisms, however, are capable of extending twice as many relations as inner automorphisms. Yet they do so by extending structurally from a particular paradigm of pitch-class transposition and inversion without much regulation from phenomenological concerns.

The conflict between these two standpoints relates to one of the persistent features of work by and inspired by Lewin which often, though not always, seeks to resolve such contradictions by proceeding methodologically from what Lewin refers to as a musical "intuition" by way of a careful exploration of all conceivable structural possibilities that often go beyond the serviceable limits of their foundational "intuitions." Even so, the transformational aspect of Lewin's work and its reliance on group theory has occasionally come under negative criticism for representing "a divergence between the experiential and the logical."[8]

The particular framing of music-theoretic issues as an opposition between "experiential," phenomenological, perceptive or material on one hand and "logical," structural, conceptual or ideal on the other hand interacts suggestively with Frederic Jameson's description of opposing tendencies in literary genre

[8]Christopher Hasty, "An Intervallic Definition of Set Class," *Journal of Music Theory* 31/2 (1987), p. 187. Hasty's remarks do not mention Lewin's work overtly. Few will doubt, however, that they are directed at Lewin's work and work emanating from it, especially in view of his focus on "group structure governing ideal transformations."

criticism as either "semantic" or "syntactic."[9] He points out that this opposition characterizes debates between those who seek to uncover what works "mean" (how they feel) and more recent approaches that inquire into how they "work." Jameson's diagnosis is that these contradictions arise from the nature of language itself, "which, uniquely ambiguous, subject and object all at once, ... intentional meaning and articulated system, necessarily projects two distinct and discontinuous dimensions [that] can never be conceptually unified," even while we suppose language presents itself as a "unified phenomenon."[10]

It is not necessary to completely displace music into language in order to render the above remarks applicable to the two tendencies I have articulated with respect to the narrow context of automorphisms or even the broader circumstances of music theory in general; it is enough to recognize that there are certain important respects in which music and language resemble each other, and that these respects are involved with the kinds of phenomena Jameson describes. As a result, there are interesting connections to be drawn on one hand between "intentional meaning," musical perception, and subject, and on the other between articulated system, concepts, and object.

What this means for the present study, it seems to me, is that it would be foolishness from the point of methodology and analysis to dominate the concerns of one dimension with the concerns of the other, no matter how strongly attached to one or the other the contextual discipline (qua discipline) asserts itself to be. In short, perhaps the best one can do for oneself is to develop methodologically, theoretically, and analytically along both lines, tolerating as best as one can the resulting contradictions.

[9]Frederic Jameson, "Magical Narratives: On the Dialectical Use of Genre Criticism," in *The Political Unconscious: Narrative as Socially Symbolic Act* (Ithaca: Cornell University Press, 1981), pp. 107–108.

[10]Jameson, p. 108.